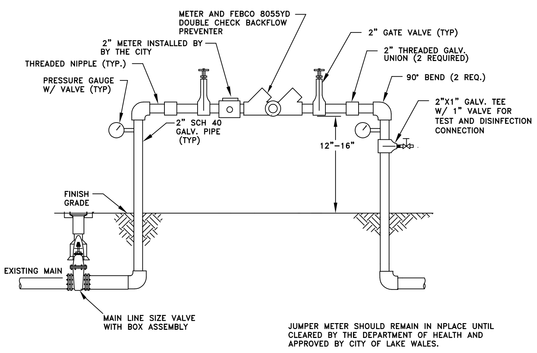

CONSTRUCTION WATER SUPPLY
CONNECTION DETAIL A

NOTES:

1. A TEMPORARY JUMPER CONNECTION IS REQUIRED AT ALL CONNECTIONS BETWEEN EXISTING ACTIVE WATER SYSTEMS AND PROPOSED NEW WATER SYSTEMS.
2. THIS DETAIL IS TO BE USED FOR FILLING ANY NEW MAIN OF ANY SIZE FROM EXISTING ACTIVE WATER SYSTEMS AND THE JUMPER CONNECTION SHALL BE MAINTAINED UNTIL AFTER FILLING, PIGGING, TESTING AND DISINFECTION OF THE NEW MAIN HAS BEEN SUCCESSFULLY COMPLETED AND CLEARANCE FOR USE FROM FLORIDA DEPARTMENT OF ENVIRONMENTAL PROTECTION (FDEP) AND OTHER AGENCIES HAS BEEN RECEIVED. ADEQUATE THRUST RESTRAINTS SHALL BE PROVIDED. PIPE AND FITTINGS USED FOR CONNECTING THE PIPE TO THE EXISTING PIPE SHALL BE DISINFECTED PRIOR TO INSTALLATION IN ACCORDANCE WITH AWWA C651 LATEST EDITION.
3. THE TIE-IN VALVES SHALL BE OPERATED AND PRESSURE TESTED IN THE PRESENCE OF UTILITIES OPERATIONS AND INSPECTION SERVICES TO VERIFY WATER TIGHTNESS PRIOR TO THE TIE-IN. VALVES WHICH ARE NOT WATER TIGHT SHALL BE REPLACED.
4. THE TEMPORARY JUMPER CONNECTION SHALL BE CONSTRUCTED AS DETAILED. THE JUMPER CONNECTION SHALL BE USED TO FILL THE NEW WATER SYSTEM AND FOR PROVIDING WATER FOR BACTERIOLOGICAL SAMPLING OF THE NEW MAIN AS REQUIRED BY THE FDEP PERMIT.

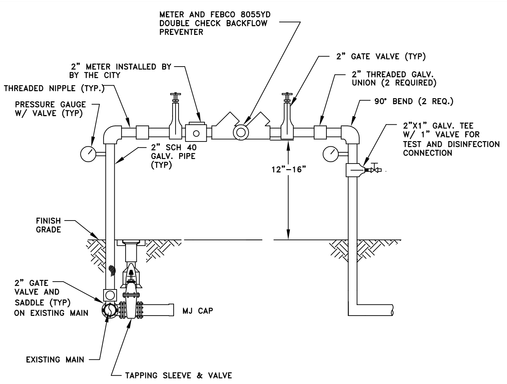

CONSTRUCTION WATER SUPPLY
CONNECTION DETAIL B

5. AFTER THE NEW LINE IS TIED IN, ONE-TIME FLUSHING MUST BE OBSERVED BY THE CITY INSPECTOR.
6. THE CONTRACTOR WILL REQUEST METER AND BACKFLOW FROM THE CITY; AFTER INSTALLATION THE CONTRACTOR WILL NOTIFY THE CITY AND THE CITY INSPECTOR WILL TEST THE SYSTEM FOR PROPER OPERATION.
7. UPON RECEIPT OF CLEARANCE FOR USE FROM FDEP AND ALL OTHER PERTINENT AGENCIES THE CONTRACTOR SHALL REMOVE THE TEMPORARY JUMPER CONNECTION AND FINAL TIE-IN BE DONE [WITH SUPER CHLORINATION] UNDER CITY INSPECTOR OBSERVANCE FOR ACTIVATION OF THE NEW SYSTEM.
8. ALL INSTALLATION AND MAINTENANCE OF THE TEMPORARY JUMPER CONNECTION AND ASSOCIATED BACKFLOW PREVEN-TION DEVICE FITTINGS SHALL BE THE RESPONSIBILITY OF THE CONTRACTOR.
9. WHEN THE CONTRACTOR HAS ESTABLISHED AN ACCOUNT WITH LAKE WALES UTILITIES-CUSTOMER SERVICE, UTILITIES OPERATIONS SHALL PROVIDE THE METER ASSEMBLY TO THE CONTRACTOR.

NOTES:
1. PIPE BEDDING: SELE
AASHTO T-180.
2. TRENCH BACKFILL: C
AASHTO T-180.
3. PIPE BEDDING UTILIZ
TYPE "A" BEDDING
4. (*): 15" MAX. FOR
AND LARGER.
5. TRENCHES MUST BE
6. ALL PIPE TO BE INS
7. REFER TO THE MANU
8. FINAL RESTORATION
REGULATIONS OF GO
RIGHT-OF-WAY SHA
AND ROAD CONSTRU

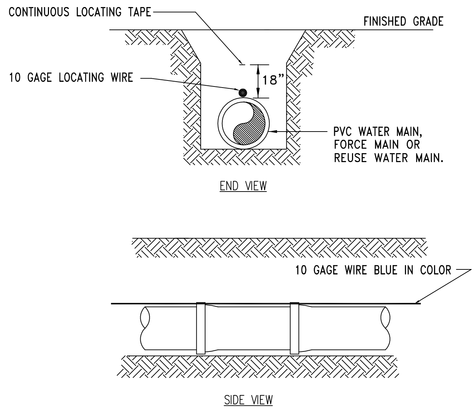

NOTES:
1. ALL PRESSURE PIPE SHALL REQUIRE INSULATED METALLIC LOCATING WIRE (10 GAUGE COPPER) CAPABLE OF DETECTION BY A CABLE LOCATOR AND SHALL BE BURIED DIRECTLY AGAINST THE PIPE. 10 GAUGE WIRE MUST BE BLUE IN COLOR.
2. LOCATING WIRE SHALL TERMINATE AT THE TOP OF EACH VALVE BOX AND BE CAPABLE OF EXTENDING 12" ABOVE TOP OF BOX IN SUCH A MANNER SO AS NOT TO INTERFERE WITH VALVE OPERATION.
3. USE DUCT TAPE AS NECESSARY TO HOLD WIRE DIRECTLY AGAINST THE PIPE.

PVC PIPE LOCATING WIRE DETAIL

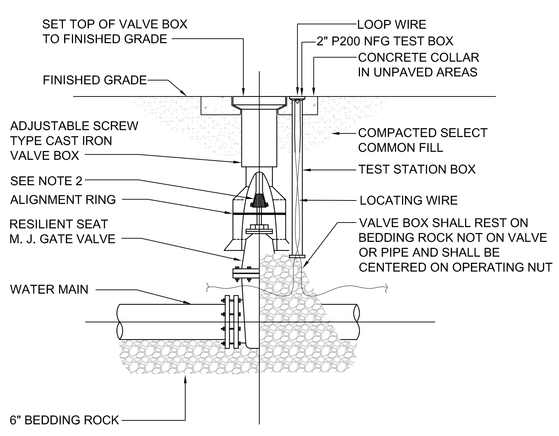

NOTES:
1. 6" DIA. PVC PIPE IS PERMITTED FOR USE AS VALVE BOX EXTEN-SION.
2. THE ACTUATING NUT FOR DEEPER VALVES SHALL BE 2.5 FEET BELOW FINISHED GRADE. EXTENSIONS SHALL BE PROVIDED AS REQUIRED.
3. VALVE BOX LIDS SHALL BE ROUND FOR WATER AND MARKED AS SUCH.
4. VALVE BOX LIDS SHALL BE SQUARE FOR REUSE WATER AND MARKED AS SUCH.

GATE VALVE AND BOX DETAIL

Restrain Joint

NOTES:
1. FIRE HYD
2. CLEARAN
STANDAR
3. RESTRAIN
4. FIRE HYD
5. FIRE HY
CITY SPE
6. HOSE BI