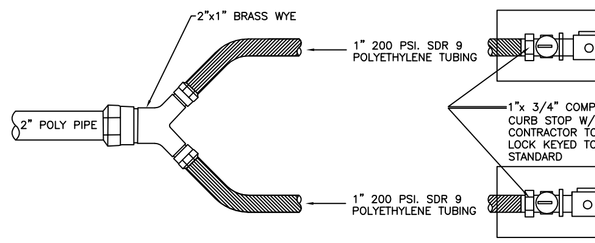

DOUBLE SERVICE PLAN

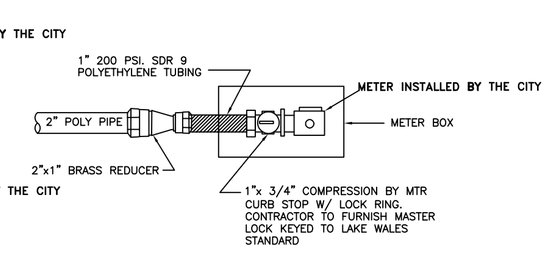

SINGLE SERVICE PLAN

RHINO-METER BOXES
MB16-BLACK COMPLETE - TR HOLE
MB18-BLACK COMPLETE - TR HOLE

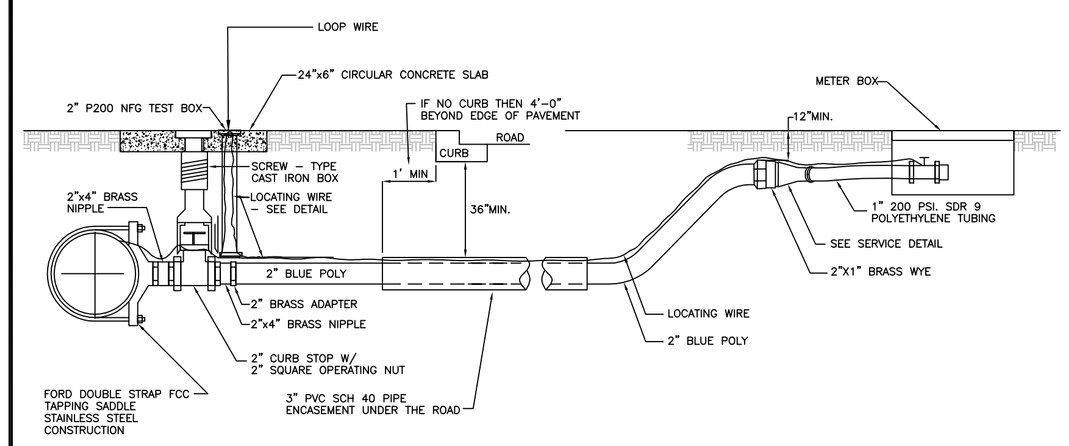

1. STAINLESS STEEL INSERT FOR POLY TUBE (TYP.)

SERVICE REQUIRING ROAD CROSSING

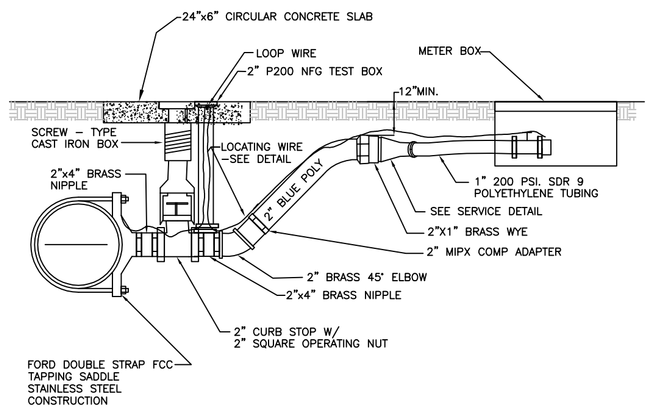

1. STAINLESS STEEL INSERT FOR POLY TUBE (TYP.)

SERVICE NOT REQUIRING ROAD CROSSING

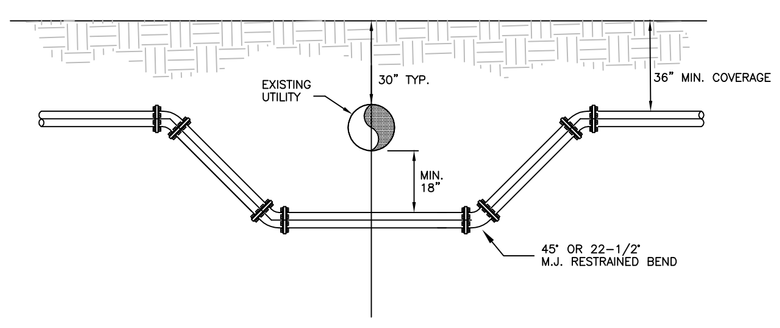

UTILITY CROSSING - FITTING TYPE

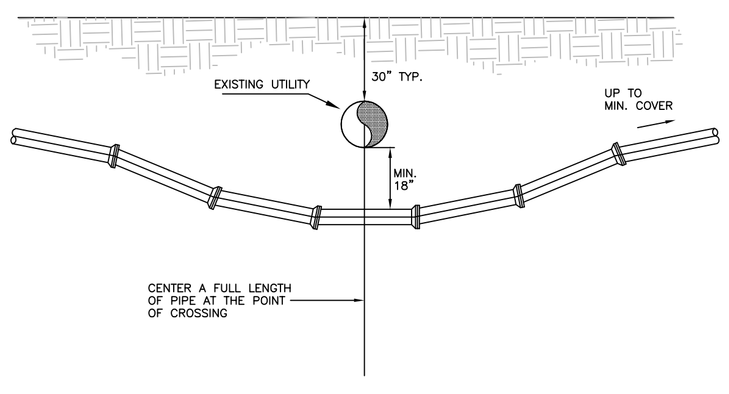

2. THE DEFLECTION TYPE CROSSING SHALL BE USED WHENEVER POSSIBLE. ONLY UNDER SPECIFIC ORDERS BY THE ENGINEER SHALL THE FITTING TYPE CROSSING BE ALLOWED.

3. CONSTRUCT CROSSING USING 75% OF MANUFACTURERS MAXIMUM JOINT DEFLECTION (MAXIMUM).

UTILITY CROSSING - DEFLECTION

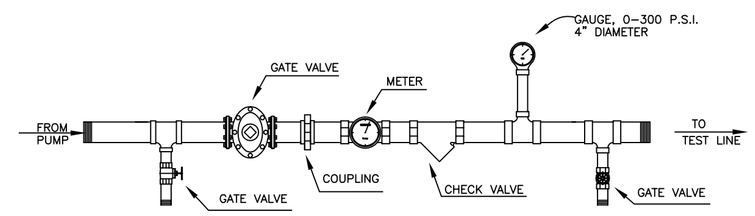

PRESSURE TEST

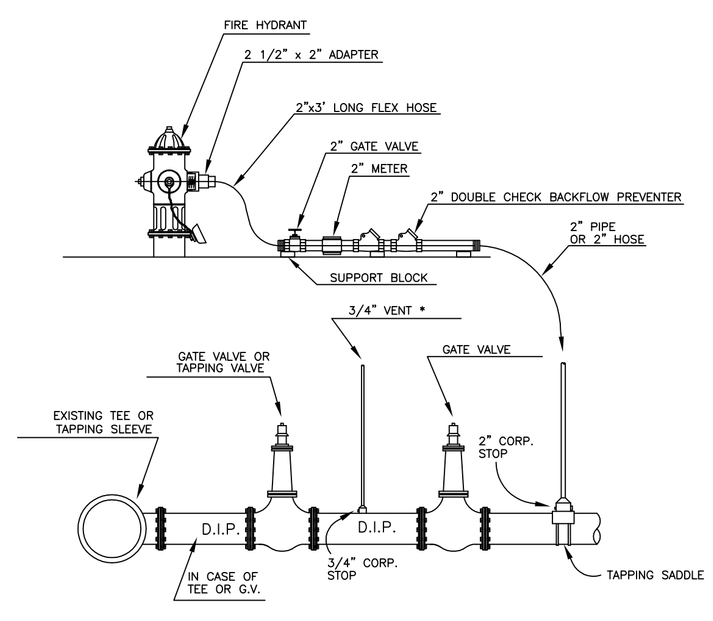

FILLING CONNECTION

* NOTE: AFTER TESTS REMOVE 3/4" TUBING AND 2" GALVANIZED PIPE AND INSTALL PLUGS ON CORPORATION STOPS.

RESTRAINED PIPE

	DISTANCE IN FEET		
SIZE	A & B	C	D
4"	18	18	54
6"	18	18	72
8"	18	36	90
10"	18	36	108
12"	18	36	126
14"	18	54	144
16"	18	54	162
18"	18	54	180
20"	18	72	198
24"	18	72	216

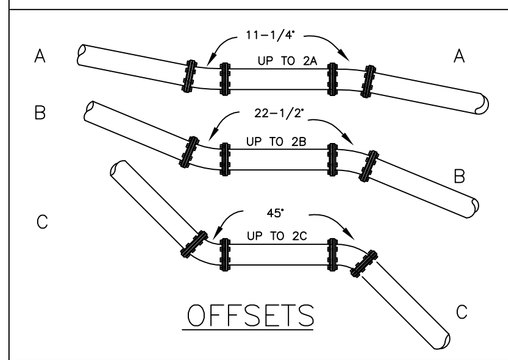

OFFSETS

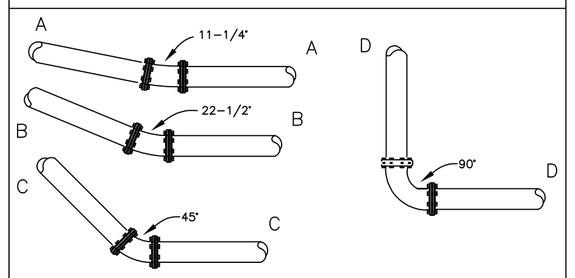

DEFLECTIONS

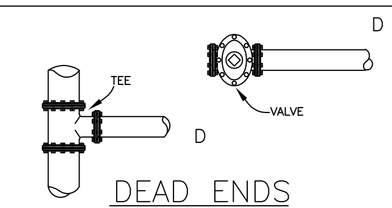

DEAD ENDS

RESTRAINED PIPE

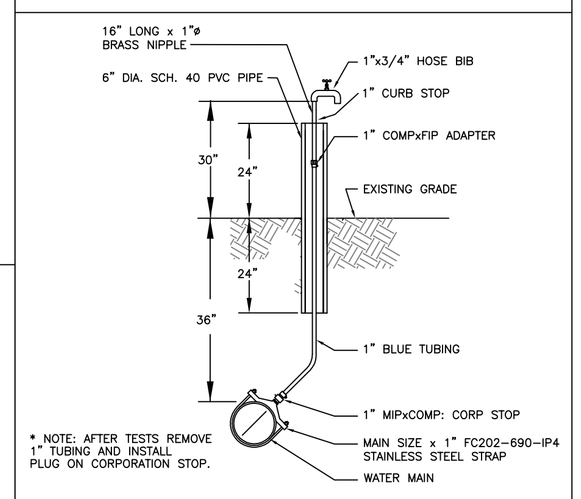

* NOTE: AFTER TESTS REMOVE 1" TUBING AND INSTALL PLUG ON CORPORATION STOP.

TYPICAL BACTERIOLOGICAL SAMPLING POINT AT INTERMEDIATE POINTS

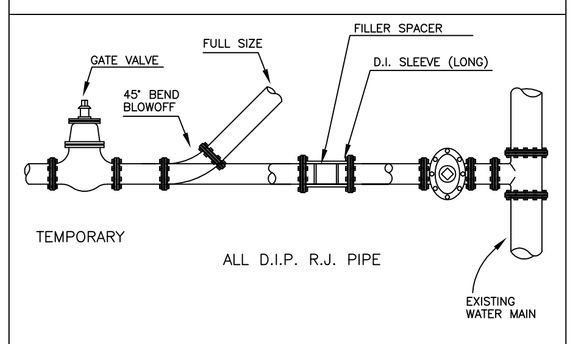

FLUSHING CONNECTION AND BLOW OFF DETAIL

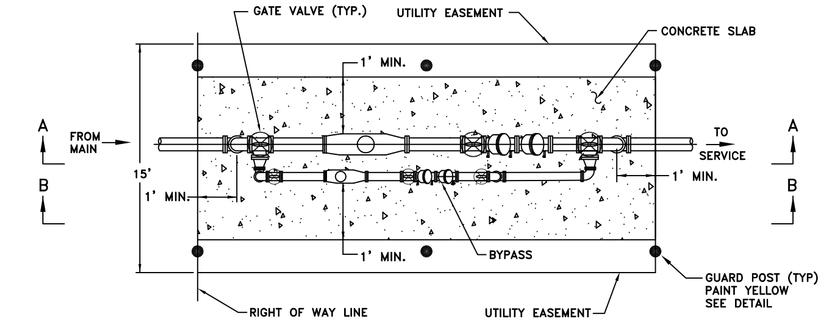

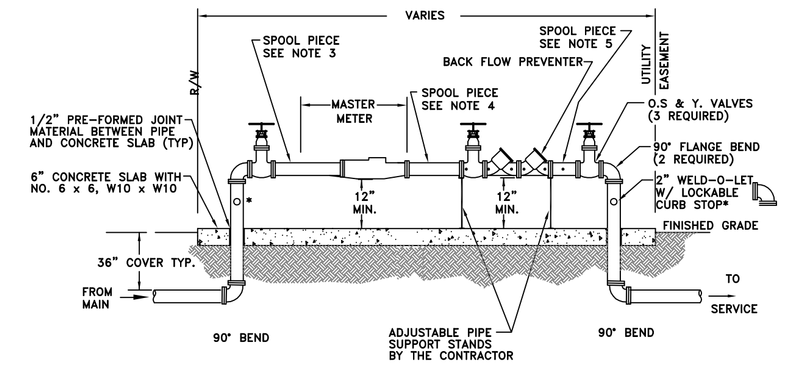

SECTION A-A

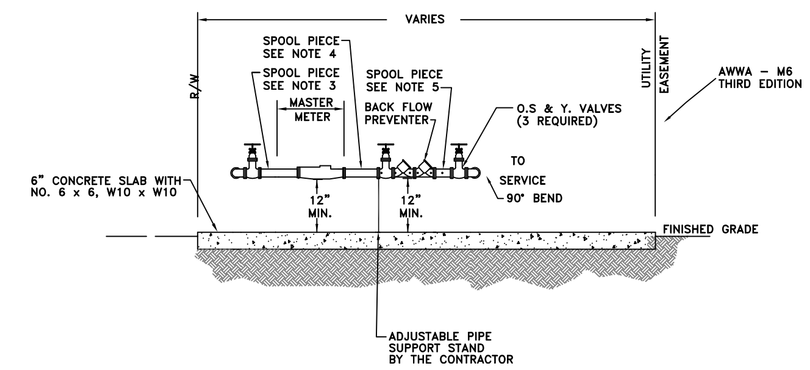

SECTION B-B
(BYPASS)

NOTES:

1. ALL PIPE, FITTINGS, APPURTENANCES, METER AND BACKFLOW PREVENTER SHALL BE FURNISHED AND INSTALLED BY THE CONTRACTOR.
2. ALL ABOVE GROUND PIPE SHALL BE FLANGE DUCTILE IRON.
3. SPOOL PIECE MINIMUM LENGTH SHALL BE TEN TIMES THE PIPE DIAMETER.
4. SPOOL PIECE MINIMUM LENGTH SHALL BE FIVE TIMES THE PIPE DIAMETER.
5. SPOOL PIECE LENGTH SHALL BE A MINIMUM OF ONE FOOT. ON SPOOL PIECE PLACE A 2" HEAVY DUTY WELD-O-LET NINETY DEGREES FROM THE TOP OF SPOOL PIECE. WELD-O-LET TO BE INSTALLED WITH A LOCKABLE CURB STOP (TEST PORT).
6. MASTER METER SHALL BE SENSUS COMPOUND FLOW METER.
7. METER SHALL BE PAINTED BLUE WHEN COMPLETED EXCEPT FOR BRASS.

MAIN METER ASSEMBLY 3" AND LARGER

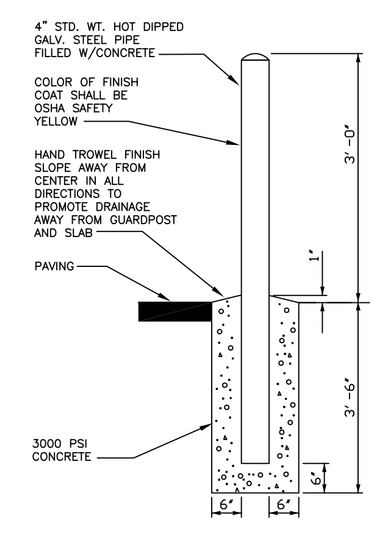

GUARDPOST DETAIL

ISSUE CODE
MODIFIED NAH
10-09-14

CITY OF LAKE WALES
132 EAST CENTRAL AVE. LAKE WALES, FLORIDA 33859-3320

8-28-12 NFG TEST BOX
9-07-12 METER DETAIL ON SERVICES

ISSUE CODE			
C BIDS	A PRELIMINARY	B DESIGN	
	D CONSTRUCTION	E APPROVAL	

DESIGN: SCALE: N.T.S.
CHK'D BY: DATE:
DRAWN BY: ENGR. APPR.
DRAWING TITLE
WATER DETAILS
AREA CITY-OF-LAKE-WALES
JOB NO.
SHEET - OF -
REV.