USF # 663-AB-M LID MANHOLE FRAME AND COVER

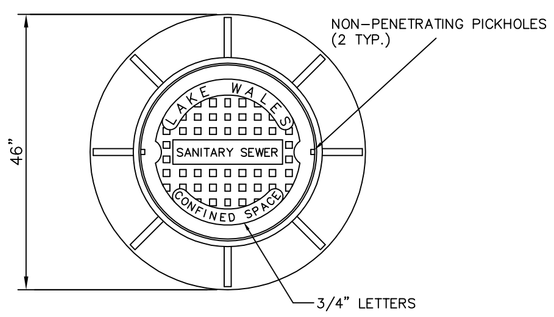

ASSEMBLY

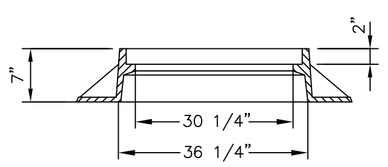

FRAME

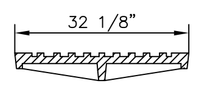

COVER

MANHOLE JOINT DETAIL

NOTES:

PAVED AREAS – SET FRAMES AT FINISH GRADE.
UNPAVED AREAS – SET FRAMES AT FINISH GRADE + 0.5'.

U.S. FOUNDARY & MFG. CORP. REF. CAT. NO. 663-AB-M MAT'L – CAST IRON, ONE COAT OF ASPHALTIC PAINT (OR CITY APPROVED EQUAL)

MANHOLE COVER SHALL BE IMPRINTED WITH "SANITARY SEWER" AND WITH NOTE "CONFINED SPACE".

MANHOLE DROP AND RESILIENT CONNECTION

DROP MANHOLE SCHEDULE	
INLET PIPE DIA. "D"	INLET PIPE DIA. "d"
8"	8"
10"	8"
12"	10"
15"	12"
18"	15"
21"	18"
24"	18"

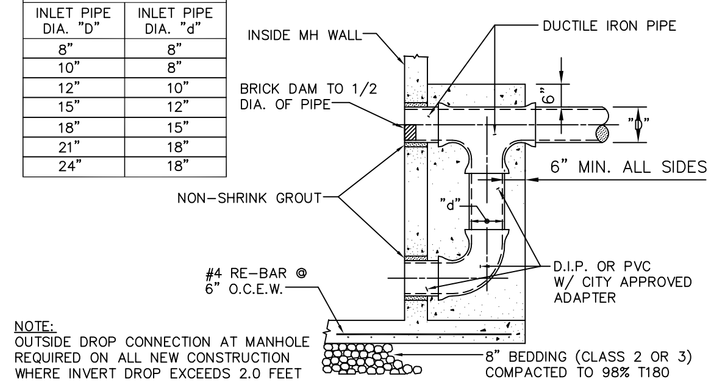

NOTE:
OUTSIDE DROP CONNECTION AT MANHOLE REQUIRED ON ALL NEW CONSTRUCTION WHERE INVERT DROP EXCEEDS 2.0 FEET

MANHOLE OUTSIDE DROP CONNECTION

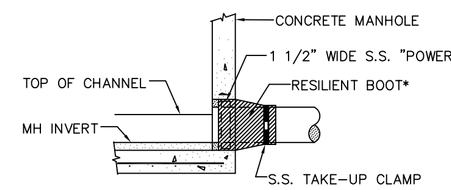

*RESILIENT BOOT SHALL BE PSX MANUFACTURED BY PRESS SEAL GASKET CORP., 6935 LINCOLN PARKWAY, FT. WAYNE, IN., OR CITY APPROVED EQUAL, MEETING ASTM C923.

MANHOLE RESILIENT BOOT CONNECTION

NOTE:
1. BOOT SHALL BE INSTALLED STRICTLY IN ACCORDANCE WITH MANUFACTURER'S DIRECTIONS.
2. FOR USE ON PRECAST MANHOLES. ALSO APPLICABLE ON CAST-IN-PLACE MANHOLES WHEN USED WITH A HOLE FORMER.
3. THE VOID BETWEEN BOOT AND PIPE SHALL BE FILLED WITH GROUT AND COATED AS SPECIFIED FOR THE MANHOLE.

SANITARY SEWER MANHOLE

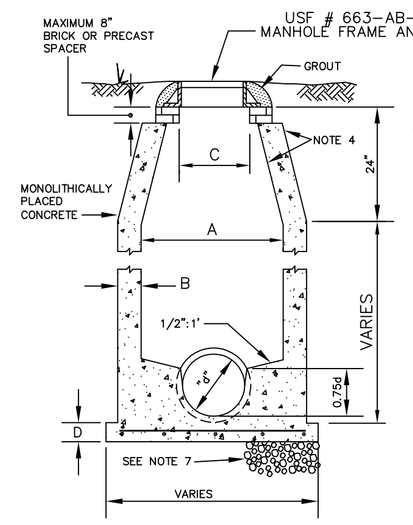

N.T.S.

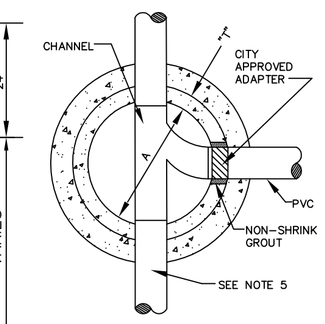

CONNECTION DETAIL
N.T.S.

NOTES:
1. CONCRETE SHALL BE 4000 PSI, USING ASTM C150 CEMENT, TYPE 2 OR 5.
2. CONE SECTION SHALL BE EITHER CONCENTRIC (PREFERRED) OR ECCENTRIC.
3. FLOOR SHALL CONTAIN #4 REINFORCEMENT AT 6" CENTERS WITHIN THE CENTER 1/3, AS A MINIMUM.
4. TWO COATS OF 8 DRY MILS, FOR A MINIMUM OF 16 MILS, TOTAL DRY THICKNESS, INSIDE AND OUTSIDE OF KOPPERS BITUMASTIC 300M EPOXY OR PORTER TARSET MAXI-BUILD # 67080 BLACK, OR EQUAL.
5. MANHOLE CONNECTIONS TO DUCTILE IRON AND CLAY PIPE MAY BE DIRECTLY CAST IN PLACE. CITY APPROVED ADAPTER RINGS MUST BE USED WITH PVC PIPE.
6. REINFORCE STEEL PER ASTM C478-88a.
7. 8" BEDDING (CLASS 2 OR 3) COMPACTED TO 98% AASHTO T180.
8. ALL PROVISIONS OF THE CITY'S "STANDARDS FOR WASTEWATER SYSTEM CONSTRUCTION" SHALL APPLY.
9. FOR MANHOLE OF DEPTH GREATER THAN 15' A CERTIFIED CONSTRUCTION DRAWING SHOWING DETAILED DESIGN FEATURES WILL BE REQUIRED.
10. MAN HOLE SHALL BE COATED INSIDE AND OUTSIDE WITH A CITY APPROVED COATING EPOXY MARTIAL.

MH DEPTH	A	B	C	D
UP TO 12'	60"	6"	36"	8"
>12' AND DEEPER	72"	8"	36"	10"

NOTE
MANHOLES CONSTRUCTED IN UNPAVED AREAS SHALL PROVIDE RIM ELEVATIONS 0.50' ABOVE DESIGN GRADE VIA SMOOTH TRANSITION. MANHOLE COVERS SHALL BE OF WATERTIGHT DESIGN.

SHALLOW MANHOLE DESIGN

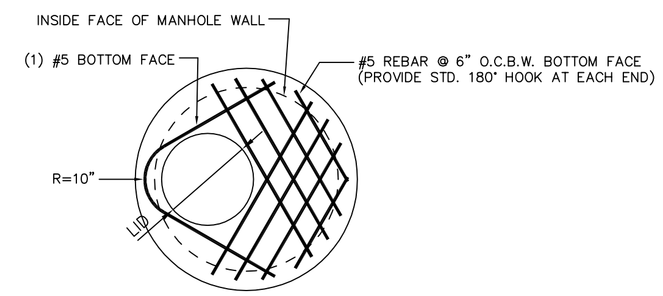

SHALLOW MANHOLE TOP

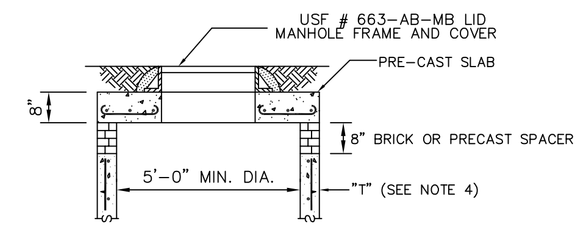

TOP DETAIL

NOTE:
1. STANDARD MANHOLE SPECIFICATIONS EXCEPT WHERE OTHERWISE NOTED.
2. PRECAST TOP SLAB SHALL CONFORM TO DETAIL AND D.O.T. MINIMUM STANDARDS. REF. D.O.T. INDEX #201, SHEET 1 OF 5. OPENING MAY BE CONCENTRIC (PREFERRED) OR ECCENTRIC.
3. SHALLOW DESIGN MANHOLE SHALL BE LIMITED TO DEPTHS NOT GREATER THAN 6 FEET. SEE ALSO MANHOLE FOR AIR RELEASE VALVE.
4. MINIMUM WALL THICKNESS OF 5".

GRAVITY TRENCH CROSS-SECTION TERMINOLOGY

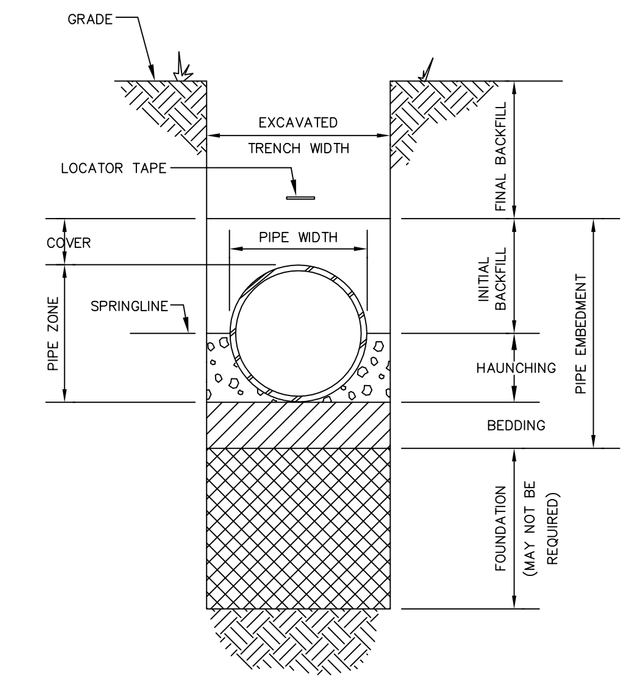

FORCE MAIN TRENCH CROSS-SECTION TERMINOLOGY

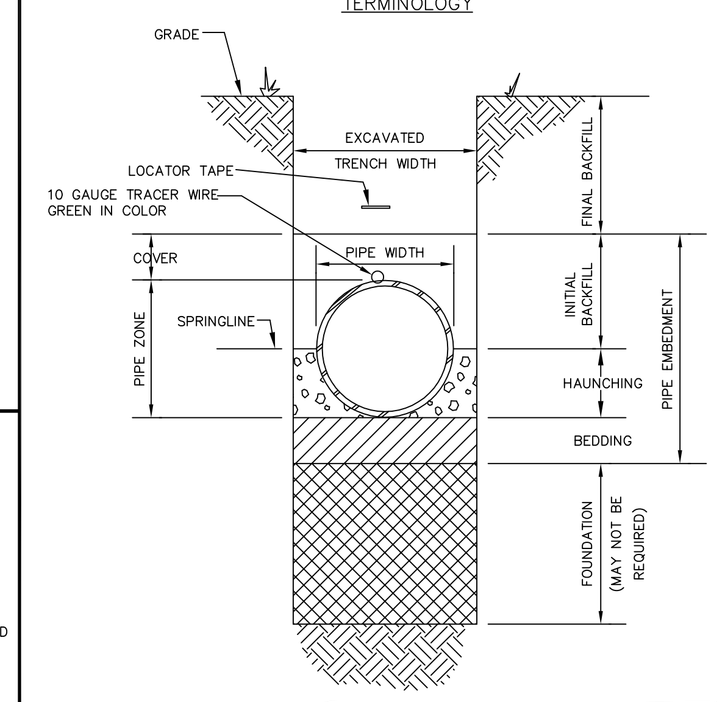

MANHOLE FOR AIR RELEASE VALVE

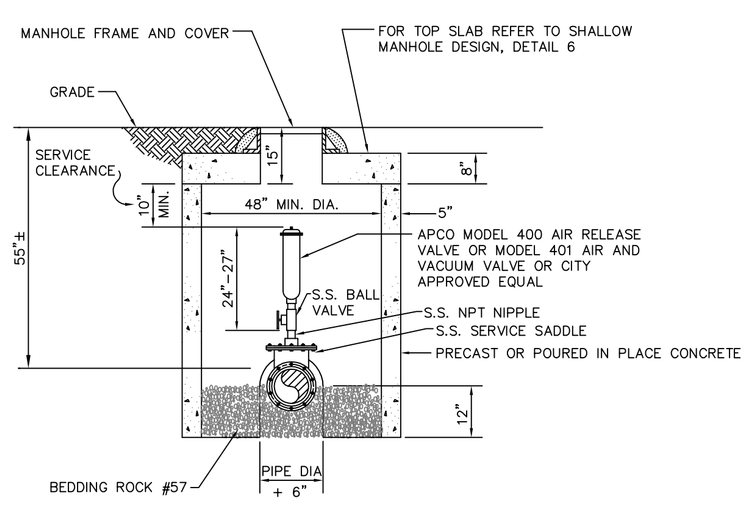

NOTES
1. STANDARD MANHOLE SPECIFICATIONS APPLY EXCEPT WHERE OTHERWISE NOTED.
2. INSTALL AIR RELEASE VALVE TO MANUFACTURERS SPECIFICATIONS.
3. BRICK OR PRECAST SPACER RING REQUIRED IF LOCATED UNDER PAVEMENT.
4. USE TAPPING SADDLE FOR 4" DIA AND SMALLER AND TEE WITH BLIND FLANGE FOR 6" DIA AND LARGER

SANITARY SEWER CONNECTION DETAILS ONE SERVICE

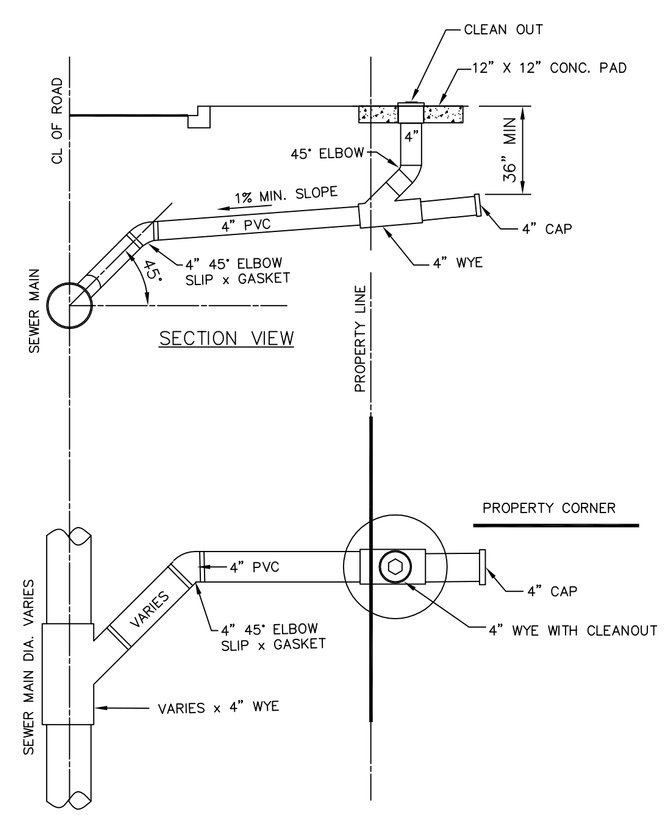

SECTION VIEW

PLAN VIEW

SANITARY SEWER CONNECTION DETAILS TWO SERVICES

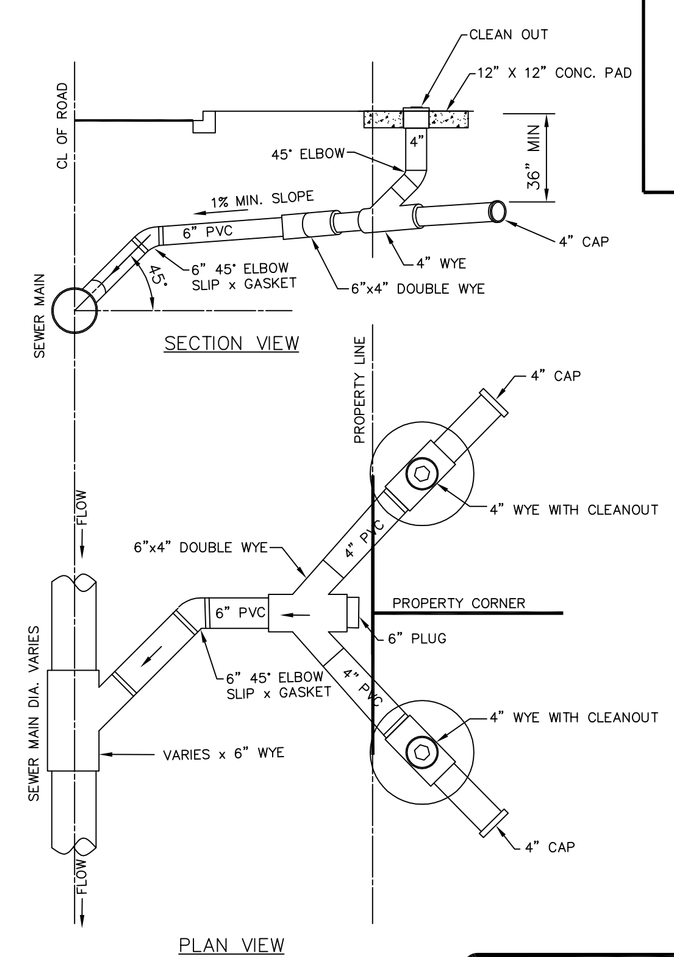

SECTION VIEW

PLAN VIEW

ISSUE CODE
Modified 07-18-16 NCH

CITY OF LAKE WALES
201 CENTRAL AVE 863-678-4182

REV.	DESCRIPTION

ISSUE CODE					
	A	PRELIMINARY		B	DESIGN
C	BIDS		D	CONSTRUCTION	E APPROVAL

DESIGN BY:
CHK'D BY: DATE:
DRAWN BY: ENGR.
DRAWING TITLE
SANITARY SEWER DETAILS
JOB NO.
SHEET – OF – REV.