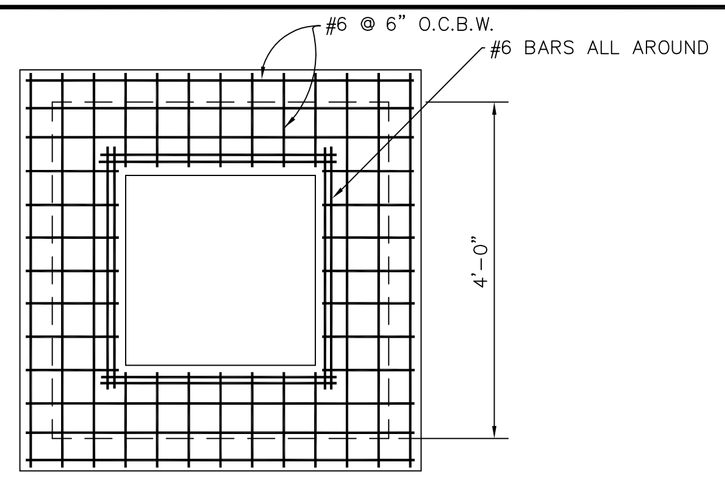

TOP SLAB REINFORCING

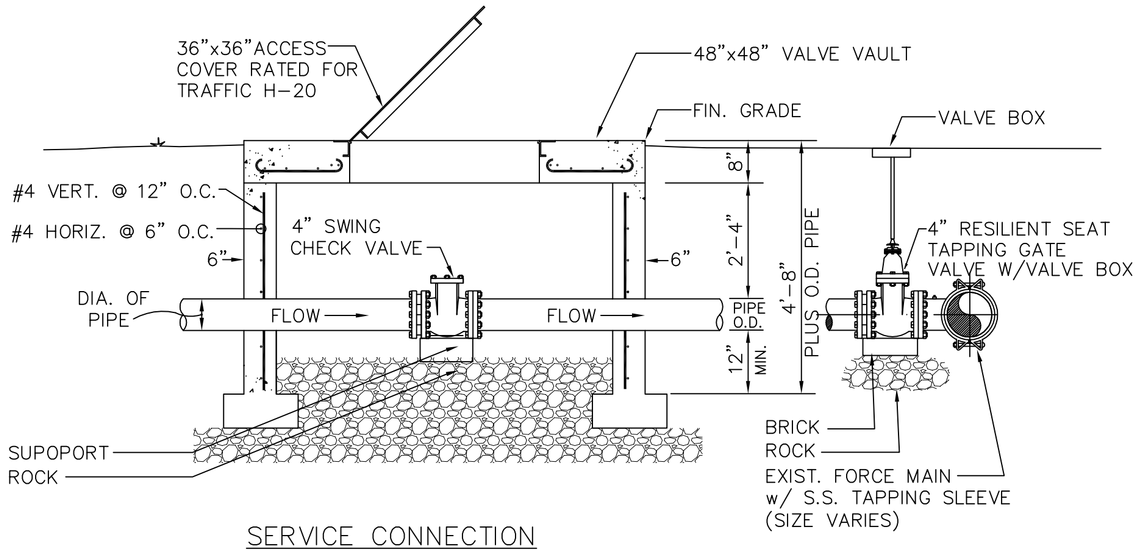

SERVICE CONNECTION
FOR EXISTING FORCEMAIN

NOTE:
1. INSTALL TRACING WIRE
2. INSTALL EARLY WARNING TAPE
3. MINIMUM OF 4" SERVICE

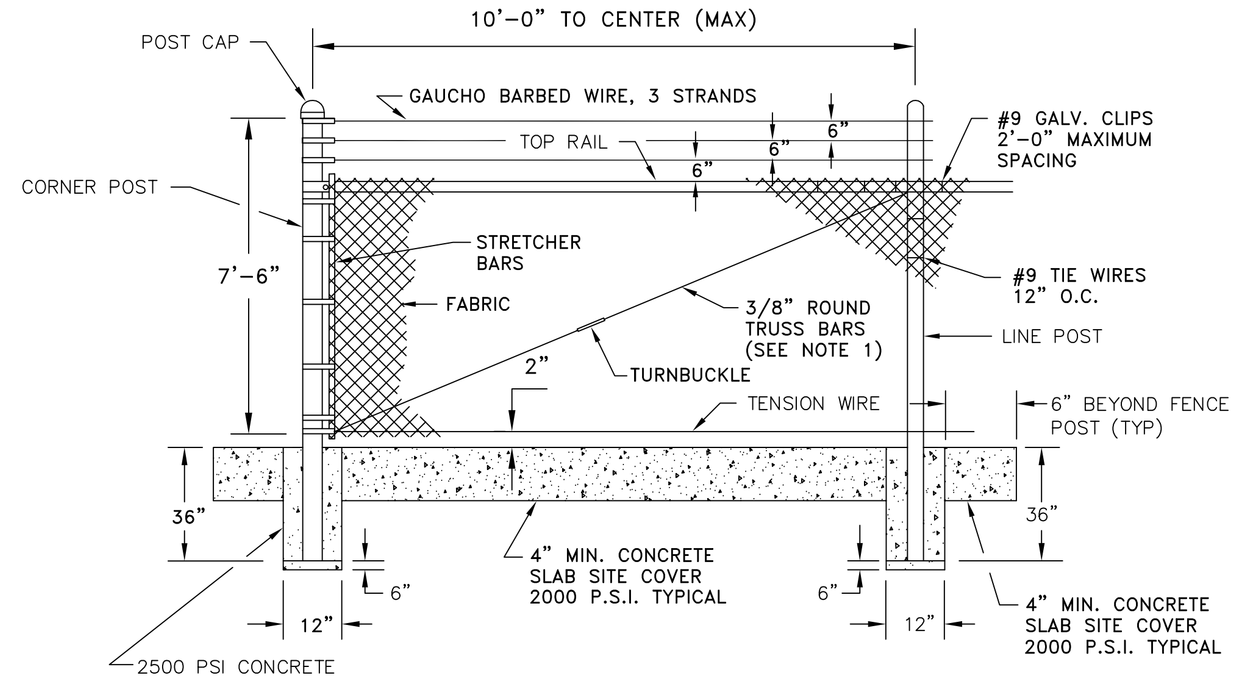

FENCE DETAIL

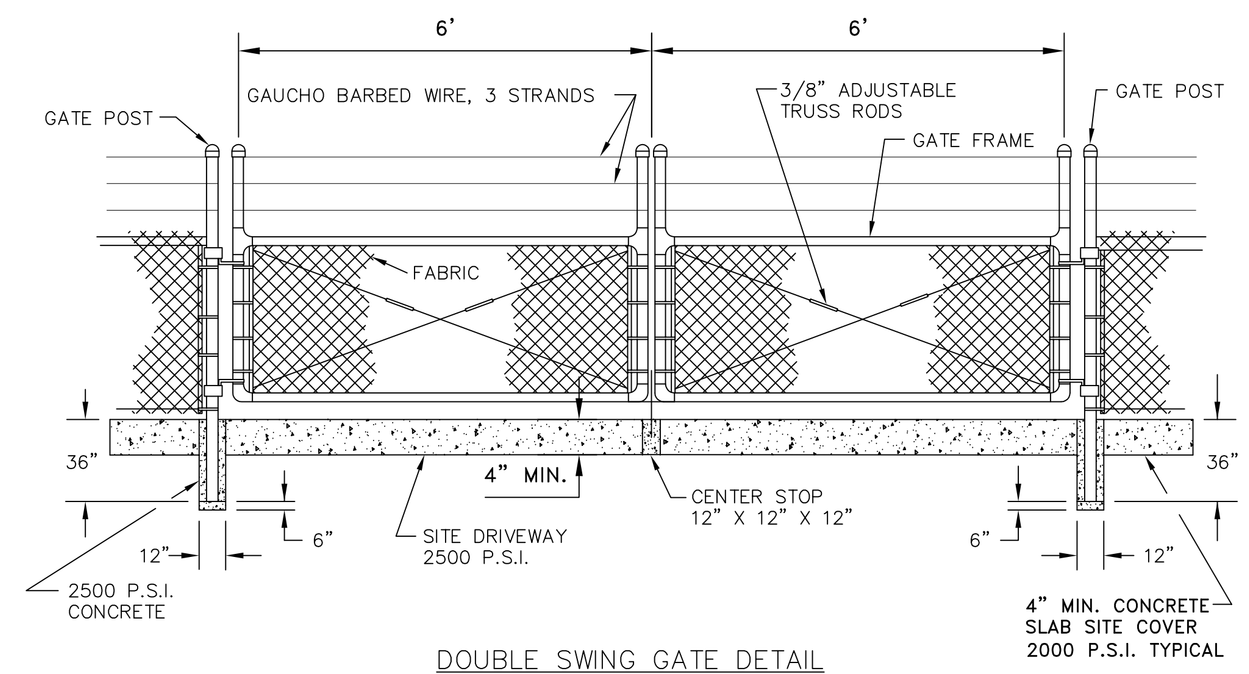

DOUBLE SWING GATE DETAIL

NOTES:
1. TRUSS RODS ARE REQUIRED FOR EACH GATE SECTION AND THE FIRST SPAN EACH SIDE OF A CORNER POST ONLY.

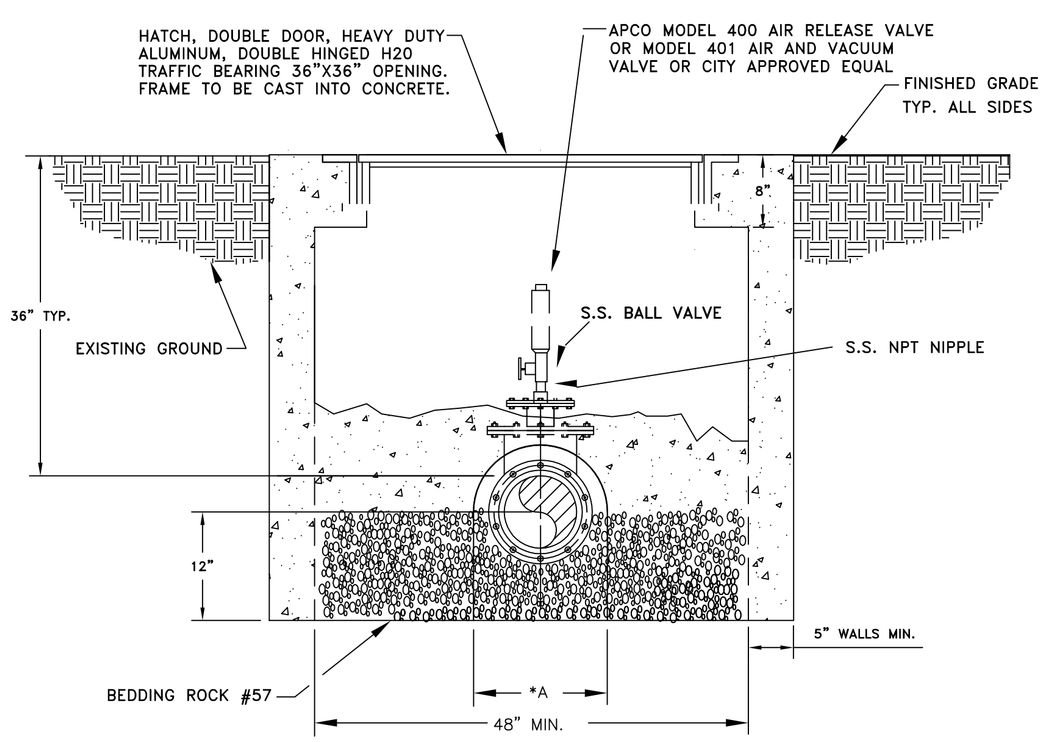

*A = PIPE DIAMETER + 6"
*B = PIPE RADIUS + 3"

END VIEW

FORCE MAIN
AIR RELEASE VALVE

ISSUE CODE

CITY OF LAKE WALES
201 CENTRAL AVE 863-678-4182

REV. DESCRIPTION

ISSUE CODE					
	A	PRELIMINARY	B	DESIGN	
C	BIDS	D	CONSTRUCTION	E	APPROVAL

DESIGN BY:
CHK'D BY: DATE:
DRAWN BY: ENGR.
DRAWING TITLE
WASTEWATER DETAILS
JOB NO.
SHEET — OF — REV.